BESTKO®

GLASS CUT-OUT
No: PF08

Ø Patch for Overpanels with Fin Fitting

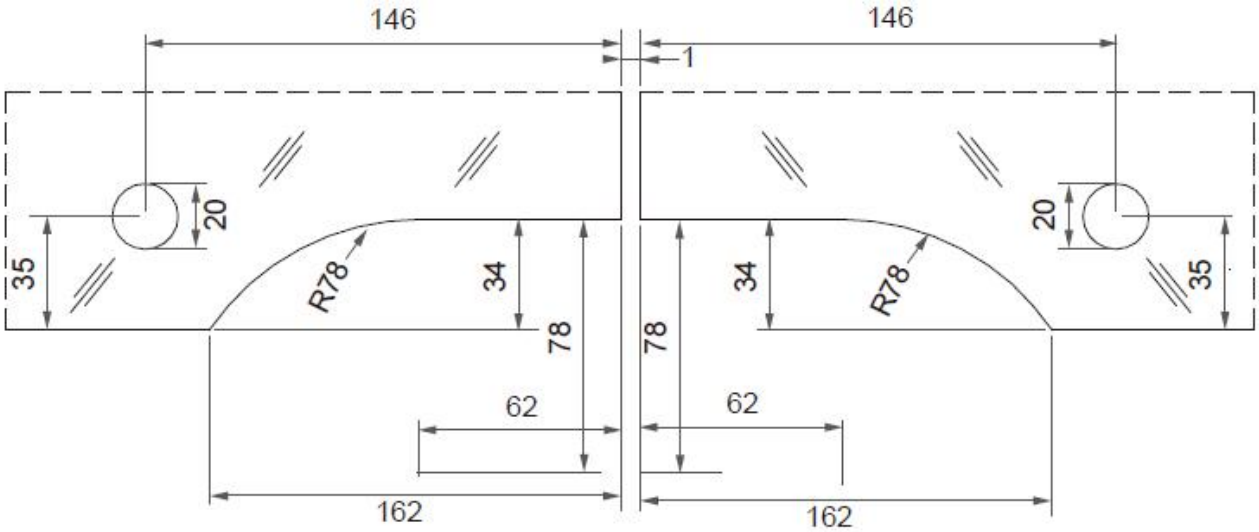

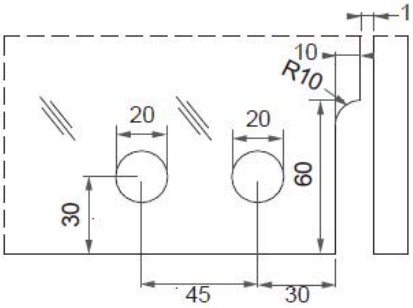

Suitable for： 10mm - 12mm | MAX 150kg

· **T51**